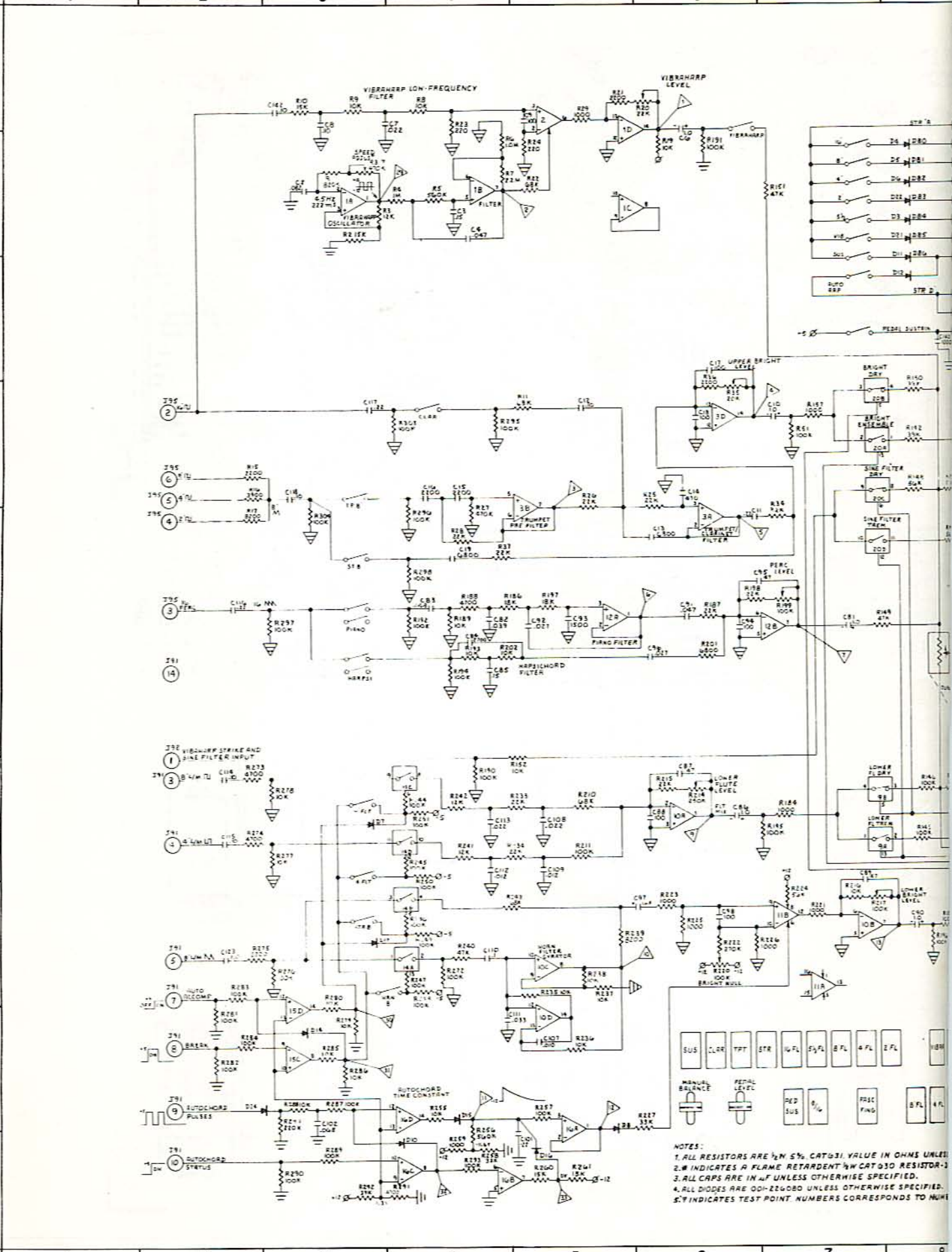
VIBRAHARP LOW-FREQUENCY FILTER
VIBRAHARP LEVEL
VIBRAHARP OSCILLATOR
FILTER
VIBRAHARP
STR 1
STR 2
AUTO BRP
PEDAL SUSTAIN
UPPER BRIGHT LEVEL
BRIGHT DRY
BRIGHT ENSEMBLE
SINE FILTER DRY
SINE FILTER TREM
TRUMPET PRE FILTER
TRUMPET/CLARINET FILTER
PERC LEVEL
PIANO
PIANO FILTER
HARPSICHORD FILTER
LOWER FLUTE LEVEL
LOWER FLDRY
LOWER FLTREM
LOWER BRIGHT LEVEL
BRIGHT NULL
HORN FILTER GENERATOR
AUTO DECOMP
BREAK
AUTOCHORD TIME CONSTANT
AUTOCHORD PULSES
AUTOCHORD STATUS
SUS
CLAR
TPT
STR
16 FL
5⅓ FL
8 FL
4 FL
2 FL
MANUAL BALANCE
PEDAL LEVEL
PED SUS
FRSC FND
8 FL
4 FL
NOTES:
1. ALL RESISTORS ARE ½W 5% CAT 031. VALUE IN OHMS UNLES
2. # INDICATES A FLAME RETARDENT ½W CAT 030 RESISTOR-1
3. ALL CAPS ARE IN µF UNLESS OTHERWISE SPECIFIED.
4. ALL DIODES ARE 001-226080 UNLESS OTHERWISE SPECIFIED.
5. ⊥ INDICATES TEST POINT. NUMBERS CORRESPONDS TO NUME