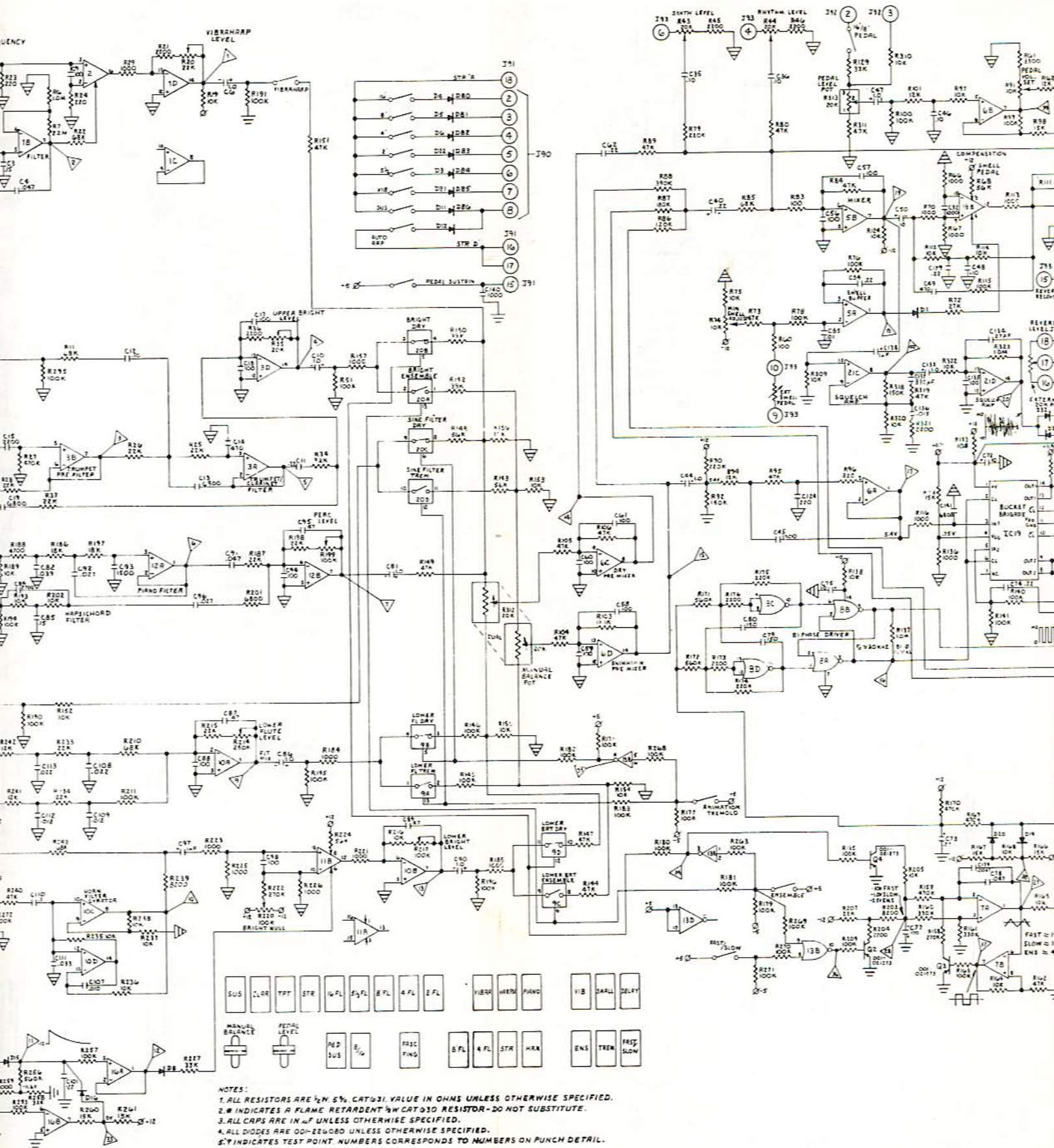

NOTES:

1. ALL RESISTORS ARE ½W. 5%. CAT#31. VALUE IN OHMS UNLESS OTHERWISE SPECIFIED.
2. # INDICATES A FLAME RETARDENT ½W CAT#30 RESISTOR - DO NOT SUBSTITUTE.
3. ALL CAPS ARE IN µF UNLESS OTHERWISE SPECIFIED.
4. ALL DIODES ARE 001-224080 UNLESS OTHERWISE SPECIFIED.
5. ⊙ INDICATES TEST POINT. NUMBERS CORRESPONDS TO NUMBERS ON PUNCH DETAIL.