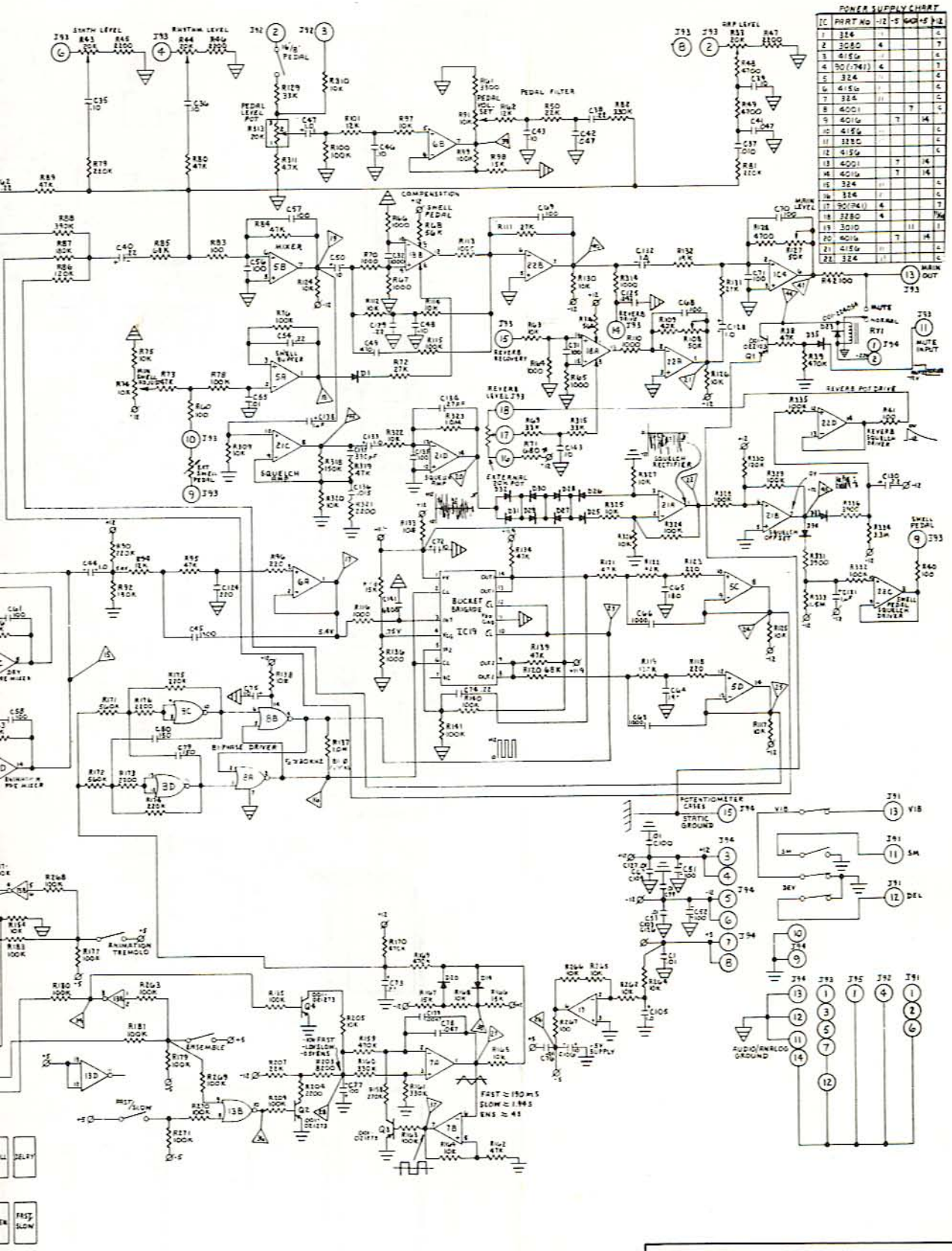

UPPER LEFT HAND ENDBLOCK PWB
SCHEMATIC
124-000811